INSTALLATION GUIDE

Product Name: Classic Surface - Aluminium Profile

Product Code: K01-1140*-2M



Installation::

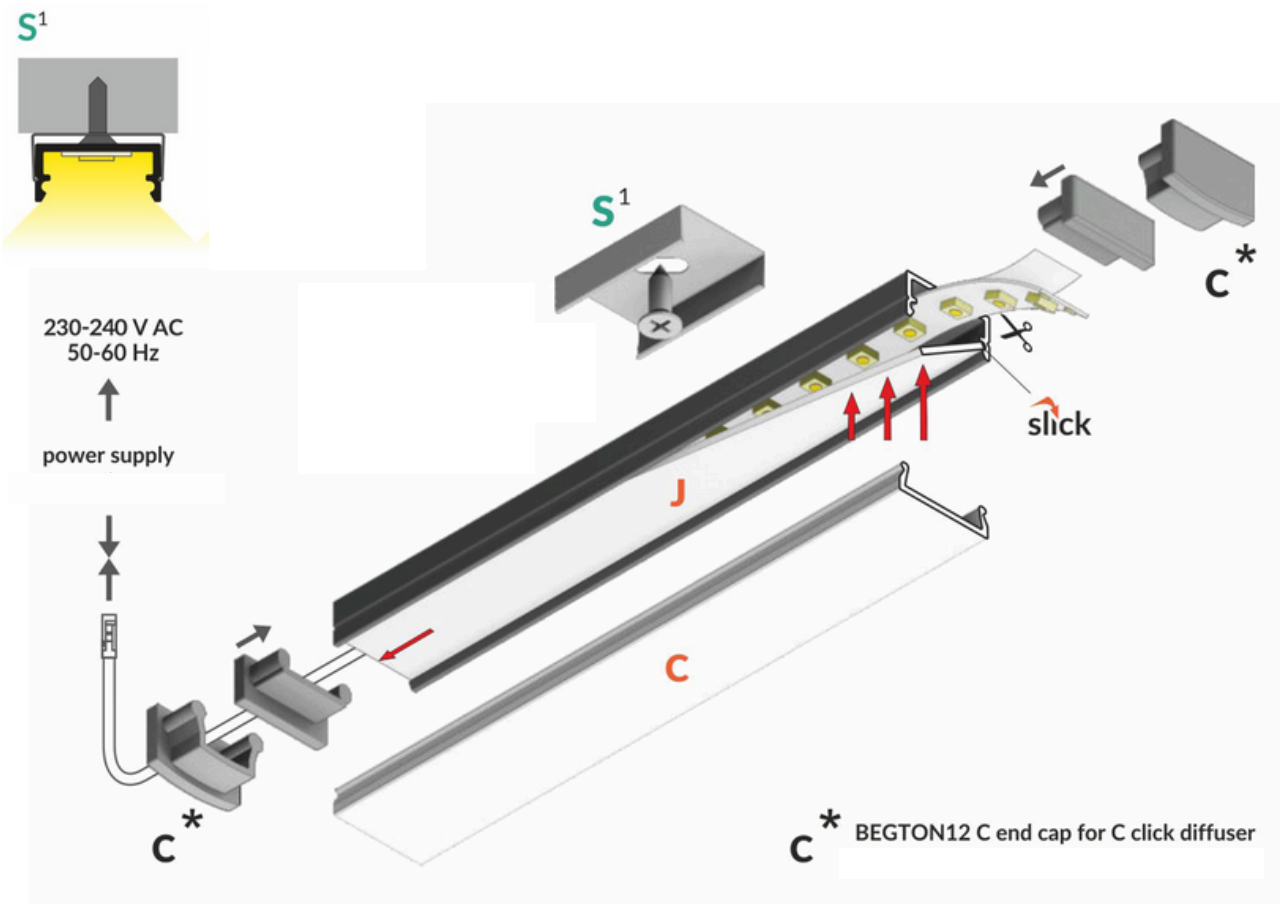

Important Safety Information:

The installation should be carried out by a qualified electrician in compliance with the current edition of the IEE wiring regulations.

+44 (0) 1302 741941 | sales@tlwglobal.com | tlwglobal.com

TLW Global Brunel House, Brunel Close, Harworth, Doncaster, DN11 8QA