INSTALLATION GUIDE

Product Name: DRIVER 8W 12V LED Driver With 4-Port Micro Plug Connector

Product Code: K10-1200

Kit Contents

- LED Driver with 4-port micro plug connector

Important Safety Information

DISCLAIMER: PLEASE NOTE LED DRIVER INSTALLATION SHOULD BE CARRIED OUT BY A QUALIFIED ELECTRICIAN!

The LED power supply is exclusively designed for the Light Emitting Diode (LED) lamps used indoors. It is a switch mode power supply with 12VDC constant output voltage.
An electronic protection circuit switches off the power supply in case of short circuit or overload in the secondary circuit, overheat as well as open circuit. After the removing of the faults, the LED power supply is resetting automatically for operation again.
The unit conforms to the directive 2014/30/EU for the electromagnetic capability and the low voltage directive 2014/35/EU.

- The LED power supply can only be used with LED lamps
- The LED power supply is only suitable for use indoors. Protect the LED power supply again excessive heat (permissible operating temperature range -20 to +45°C).
- The loads indicated on the power supply must neither exceed nor below the following values: K10-1200: 12V+/-5%
- Connect the LED lamps to the LED power supply with the correct polarity according to the schematic drawing.
- The maximum length of the output cable to the LED lamps should not exceed 2m in order to meet the EMC standard.
- If the LED power supply is used for purposes other than originally intended or it is connected in the wrong way, no liability can be taken over for possible damages.

Installation



1 1 metre power lead needs to be wired to a 240V power supply

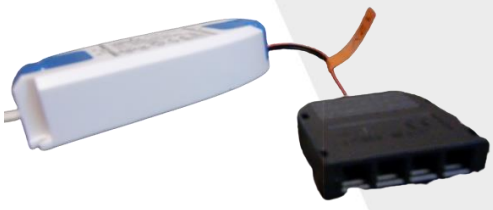

2 Plug in LED light power lead to connector block

For further details, prices and/or to order contact

+44 (0)1302 741941 | sales@tlwglobal.com | tlwglobal.com

TLW Brunel House, Brunel Close, Harworth, Doncaster, South Yorkshire, DN11 8QA

INSTALLATION GUIDE

Product Name: DRIVER 8W 12V LED Driver With 4-Port Micro Plug Connector

Product Code: K10-1200

Installation

Mounting location dimensions

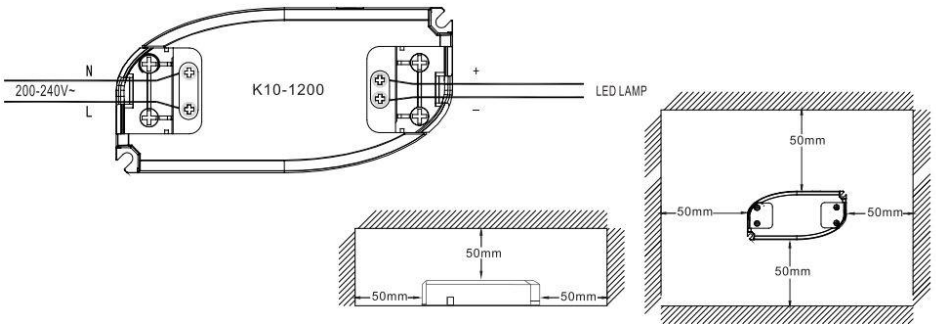

Other Information

Specifications:
Input voltage: 200-240V +/-10% 50/60Hz
Input current: <0.1A
Output voltage: 12VDC+/-5%
Rated power: 8W
Protection degree: IP20
Ambient temperature **ta**: Max 45°C
Case temperature **ta**: Max 75°C
Primary cable: H03VVH2-F 2x0.75mm²
Secondary cable: H03VVH2-F 2x0.75mm²

For further details, prices and/or to order contact

+44 (0)1302 741941 | sales@tlwglobal.com | tlwglobal.com

TLW Brunel House, Brunel Close, Harworth, Doncaster, South Yorkshire, DN11 8QA